DATASHEET

DaoSafe

access Chile MR.
Automatización & Seguridad Electrónica

DS111 TRIPOD TURNSTILE

SINGLE / BI-DIRECTION

- Tripod turnstiles are compact and cost-effective entrance/exit security solutions.
- The body is made of brushed stainless steel which is robust, rigid, anti-rust, waterproof and durable.
- It is ideal for both indoor and outdoor settings.
- It has standard relay signal, which can be integrated with any kind of third-party access control system (e.g.: RFID, Fingerprint and Biometric reader device).
- It has sufficient space, which can mount with any type of external device.(e.g.: Display, Counter, Reader, Push button, Card collector, Coin insert, Barcode/QR reader, Wheel).
- In case of emergency, tripod turnstile horizontal arms will drop down automatically to allow free passage when power off.
- Anti-tailing function: only one person passes at one time.
- It is suitable for areas with general pedestrian traffic. (e.g.: Park, School, Factory, Library, Cinema, Gym).

Features

- ✓ Long-life performance, high operation dependability and fast response.
- ✓ The whole system runs smoothly, low noise, no mechanical impact.
- ✓ Single directional or Bi-directional is selectable.
- ✓ Automatic reset function: turnstile arm will lock automatically within 5s (can be setting) if passenger delay to entry.
- ✓ When power is off, arms will drop down automatically, which is complying with fire safety requirements.
- ✓ LED indicator (red × means no entry; green →means entry).
- ✓ Easy to install and maintain.
- ✓ 3-year warranty support.

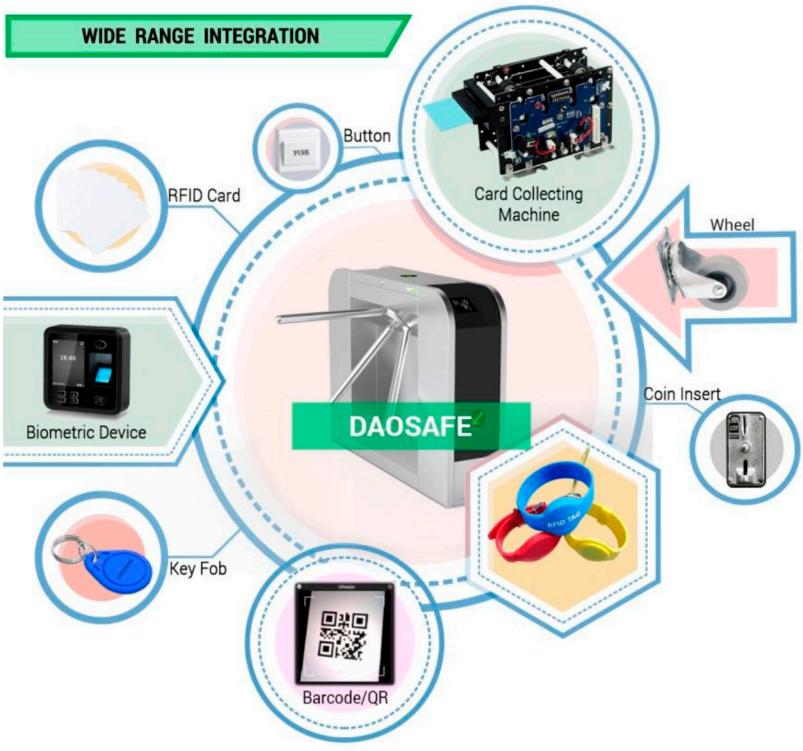

Specifications

Model No.	DS111
Brand	Daosafe
Framework Material	304 full stainless steel + black titanium
Arm	Stainless Steel (red color rubber padding for choose)
Dimension	1200 * 280 * 1000mm
Weight	55kg/pcs
Passage Width	550mm (Arm length: 500mm)
Passing Direction	Single directional / Bi-directional
MCBF	5 million
Power Supply	AC220V/110V, 50/60Hz
Operation Voltage	24V DC
Power Consumption	20W
Operation Temperature	-15 °C - 60 °C
Operation Humidity	0 ~ 95% (No freeze)
Working Environment	Indoor / Outdoor
Flow Rate	35-40 people per minute
LED Indicator	Yes
Emergency	Automatic arm drop when power off
Communication	Dry contact, Relay signal, RS485

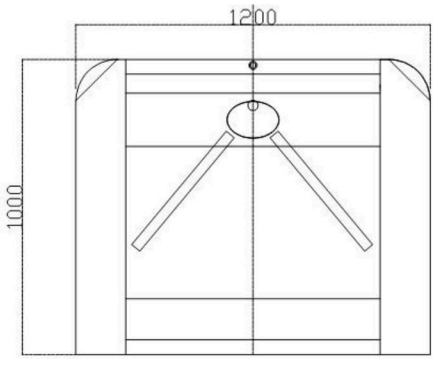

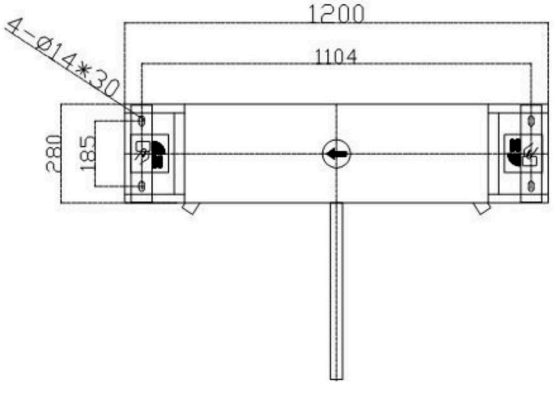

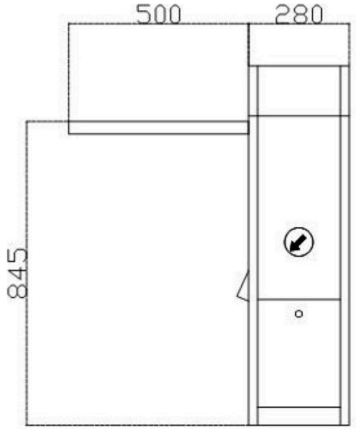

System Integration Figure

Range of Applications